FORCE ROBOTS LLC

DEBURRING • POLISHING • GRINDING • BLENDING
CUTTING • PARTING LINE REMOVAL • EDGE BREAKING

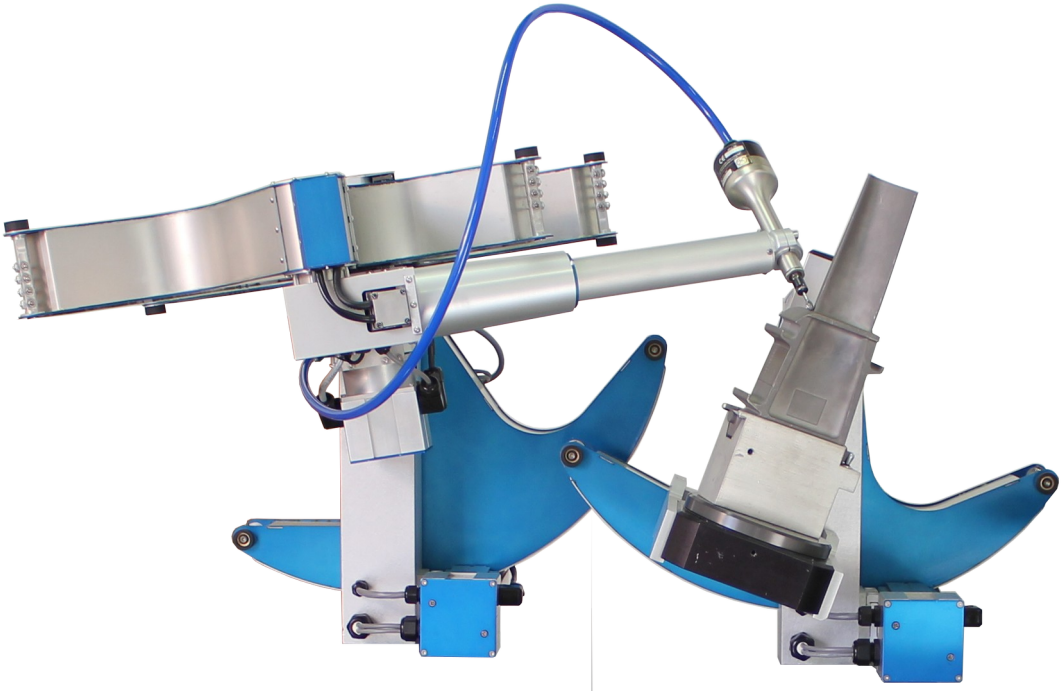

TOUCH ROBOT

Combining the precision of a machine with the finesse of the human hand.

Advanced Capabilities

- Learns part location and form by taking gentle contact measurements.
- Generates its own machining paths.
- Direct interface with the workpiece's CAD model to reference desired results.
- Closed-loop task execution delivers consistent results despite work variation.
- Optional link encoders for CMM-like, in-process inspection.

Naturally Responsive Dynamics

- Low friction, backdrivable joints
- Smooth actuation
- Light-weight and low inertia links
- Rigid tubular and box construction

Ergonomic and Easy to Use

- Velocity and force limited for safety
- Nearly silent operation.
- Positioned by direct manipulation. No teach pendant is required.
- Programmed and operated with a point-and-click, web-browser interface.

Integrates with Existing Processes

- Uses familiar material removal tools.
- Automatic tool changer option for rough-to-fine material removal capability
- Preconfigured, table-top mounting for turnkey installation.
- Compact footprint
- Open controller hardware and OS
- Uses standard motion control components
- Can connect to office and shop networks

Low Maintenance

- No fragile force/torque sensor. Forces are felt at the motors.
- Brushless motors and sealed bearings.Long-lived cable transmissions need no lubrication and resist dirt and grit.
- Convection cooling of drives and control mean no filters to replace or fans to fail.
- Motor control distributed to robot frame drastically reduces wire flex and abrasion. The only routed conductors are power and communications buses.

Specifications		
Axes		6 (4 arm, 2 positioner)
Reach (mm)		500 mm
Positioning Repeatability (mm)		± .010
Measuring Repeatability (mm)		± .010
Continuous applied force (N)		30
Maximum Speed (degrees/s)	J1	300
	J2	300
	J3	300
	J4	360
	J5	250
	J6	1500
Inertia, center of workspace, from external perspective (Kg-m^2)	J1	0.22
	J2	0.44
	J3	0.14
Equivalent mass at end effector, center of workspace (Kg)	J1	1.30
	J2	1.61
	J3	0.80
Power		120VAC or 230 VAC 400 Watts
Mass		100 Kg

End effector options for cutting, grinding, and part handling

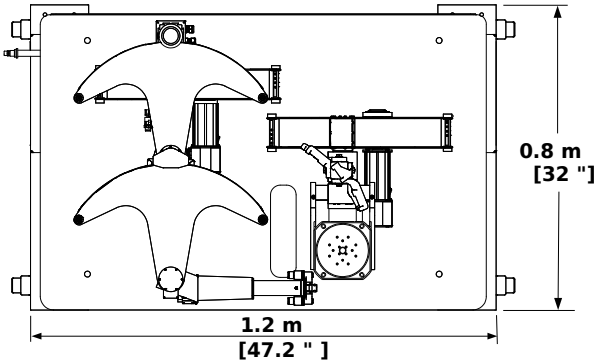

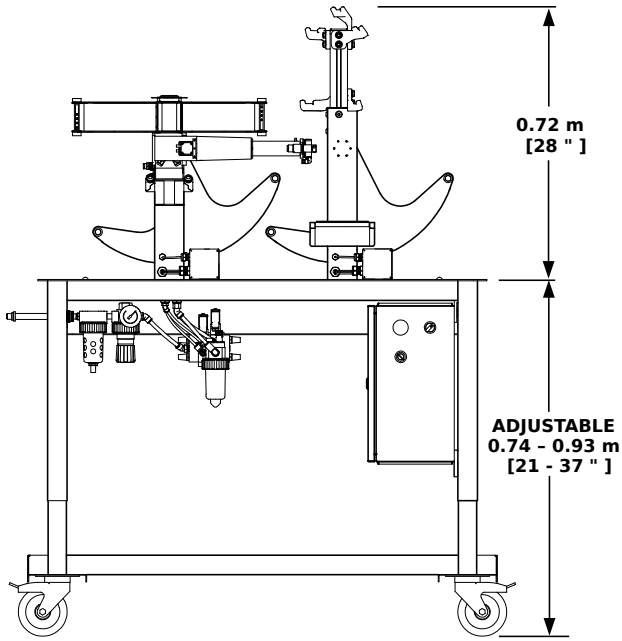

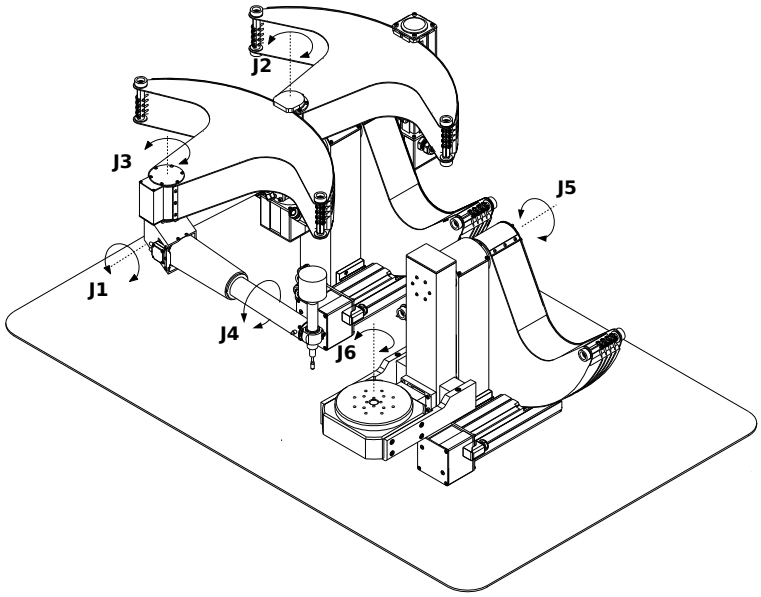

Information
216-881-8360
info@forcerobots.com
www.forcerobots.com

FORCE ROBOTS LLC
1768 E. 25th St.
Cleveland, Ohio
44114-4420